CUTLINE

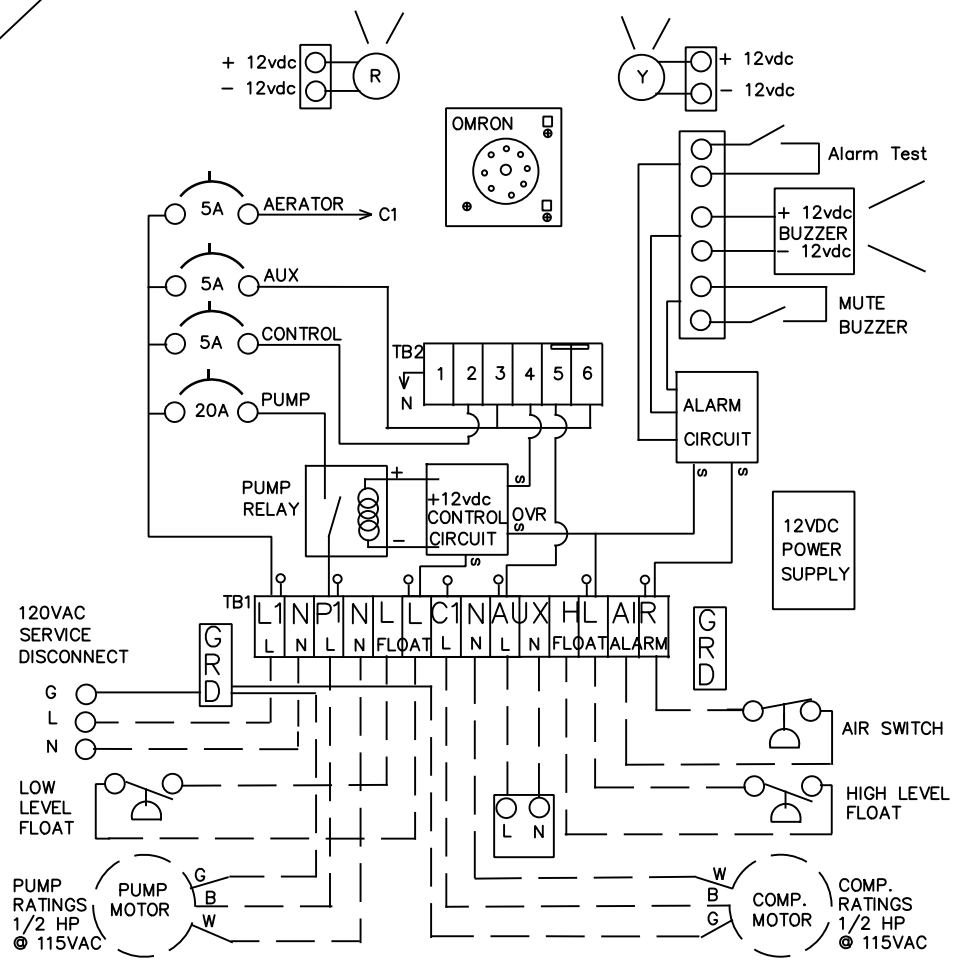


CUTLINE

CUTLINE

**ALARM TEST/PUMP:**

Push Button = Hold for TEST.
RED and Yellow Alarm lights are ON and Audible buzzer sounding.
PUMP RUN while button pushed, no Low Level float up required.

**DOSING TIMER OPERATION:**

Set time OFF with green knob:
Set time ON with red knob:
Timer only has power to dose when Low Level Float indicates water level is up in tank.

CLEARSTREAM®
WASTEWATER SYSTEMS, INC.
P.O. Box 9337 Beaumont, Texas 77709

PANEL MODEL: CS114SND
VOLTS: 115 HZ: 60
DATE OF MFG: _____

NOTES:
1. TO PRESERVE ENVIRONMENTAL RATING OF PANEL, USE FITTINGS AND HUBS WITH SAME ENVIRONMENTAL RATING AS ENCLOSURE.
2. PUMP MOTORS MUST HAVE INTERNAL OVERLOAD PROTECTION.
3. MAIN PANEL DISCONNECT MUST BE PROVIDED BY INSTALLER.
4. DASHED LINES INDICATE ITEMS NOT CONTAINED IN THE PANEL.
5. FIELD WIRING MUST BE A MINIMUM OF 60 C COPPER WIRE.

| CIRCUIT BREAKERS STATUS LIGHTS: |
|---|
| AUX (5A) GREEN = 120VAC ON |
| AERATOR (5A) GREEN = 120VAC ON |
| CONTROL (5A) GREEN = 120VAC ON |
| PUMP (20A) GREEN = 120VAC ON |

**ALL CIRCUIT BREAKERS MUST BE IN "ON" POSITION FOR NORMAL OPERATION.**

| POWER STRIP STATUS LIGHTS: |
|---|
| L1= GREEN = 120VAC is at terminal in. |
| P1= GREEN = 120VAC is sent to Pump |
| LL= GREEN = Low Level Float up, water in tank |
| C1= GREEN = 120VAC is at terminal out. |
| AUX=GREEN = 120VAC is at terminal out |
| HL= RED = FLOAT IS UP,120vac signal in |
| AIR LOW=YELLOW=AERATION TANK 120vac signal |

**ALARM LIGHTS STATUS:**

RED = Pump Tank Alarm.
sound audible, turn on light and activate override timer for pump run.

YELLOW = Aeration tank Alarm.
sound audible, turn on light.

CUTLINE